AI LPR

SL-UVC-AI-LPR

PROTECT CAMERA

Specialized 4K camera with 3x optical zoom and long-range IR night vision optimized for recognizing license plates on vehicles moving up to 90 km/h.





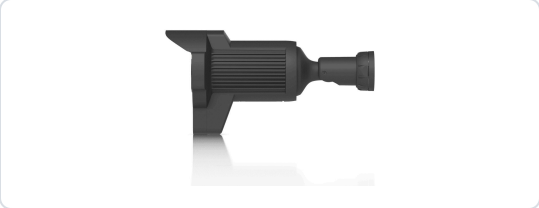



OVERVIEW

Dimensions	130 × 151.4 × 302.9 mm (5.1 × 6 × 11.9")
IR Night Vision	15 m (50 ft)
Zoom Mode	3x Optical
License Plate Recognition	✓ Yes *Optimized for night time and high vehicle speeds*
Smart Detections (People, Vehicles, Animals)	✓ Yes
Resolution	4K
Field of View	Wide: H 109.9°, V 60°, D 127.7° Tele: H 35°, V 19.8°, D 40°
Audio	Microphone
Weatherproofing	IP66
Tamper Resistance	IK04

Mounting	Wall, ceiling, pole mount (Included) Junction box, angled base (Optional)

PERFORMANCE

Networking Interface	GbE RJ45 port
Video	
Image Settings	Color, brightness, sharpness, contrast, white balance, exposure control, 2DNR, 3DNR, NR by motion, masking, text overlay
Max. Frame Rate	30 FPS
Resolution	8MP 3840 × 2160 (16:9)
Optics	
Sensor	1/1.8" 8MP
Lens	F 4.1–12.3 mm; ƒ/1.53–ƒ/3.3
IR Capture Distance	15 m (50 ft)
LPR Night Mode	LPR optimization filter *Capture reflective and non reflective plates at night*

HARDWARE

Max. Power Consumption	25.5W
Supported Voltage Range	42.5–57V DC
Power Method	PoE+
Processor	Quad-core Arm® Cortex®-A53 based chip
Pole Mount Diameter	1.5–2" (38–50 mm) *Metal strap torque: 6Nm*
Weight	1.5 kg (3.3 lb)
Enclosure Material	Aluminum alloy, polycarbonate
Mount Material	Aluminum Alloy
Expansion Slot	Micro SD memory card *Requires a memory card with at least 64GB of storage*
Button	(1) Factory reset
Cable	
Cable Connector Type	RJ45
Cable Diameter	4.5 mm (0.2")
Cable Length	30 cm (1 ft)
Jacket Material	Thermoplastic elastomer
Jacket Enclosure Dimensions	⌀20 × 70.6 mm (0.8 × 2.8")

Jacket Enclosure Material	Thermoplastic elastomer, polycarbonate, silicone rubber
Ambient Operating Temperature	-20 to 50° C (-4 to 122° F)
Ambient Operating Humidity	10 to 90% noncondensing
NDAA Compliant	✓ Yes
Certifications	CE, FCC, IC

PRODUCT DRAWINGS



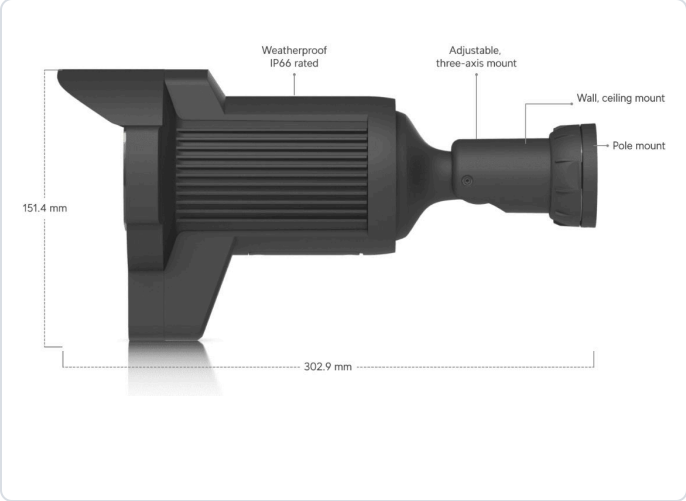

Prepared by Smart Life, LLC. Specifications and product images are provided by the manufacturer as of October 27, 2026 and are subject to change without notice. Product names are trademarks of their respective owners.